REV.	DATE	ECN NO.	MODIFICATION	APPROVER
A	2016/03/07	/	NEW	Vicky
B	2016/06/23	RD00316062301	结构变更，详见"B"处	Vicky

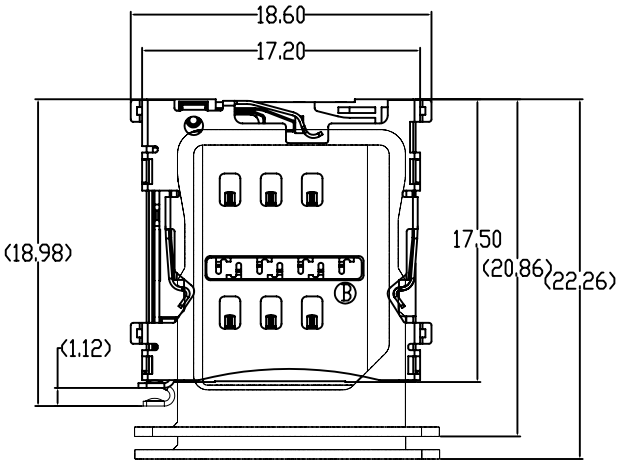

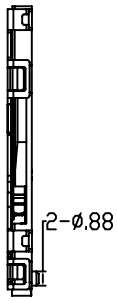

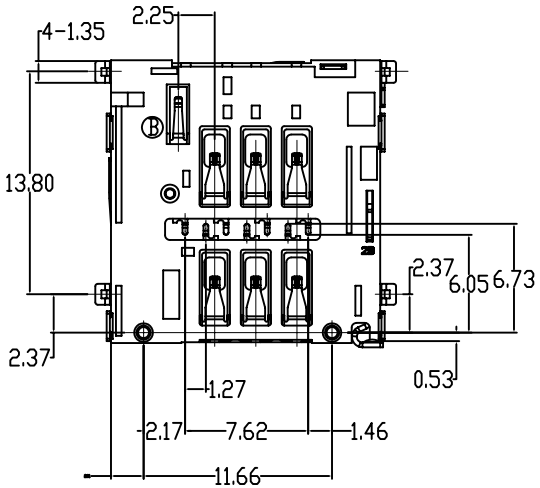

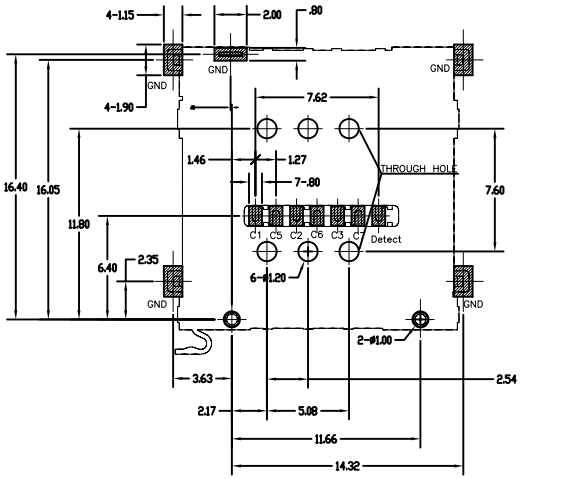

Recommended PCB Layout
Tolerance: ±0.05

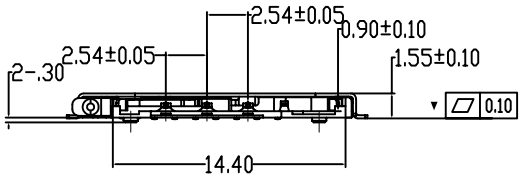

Characteristic:

1. Current Rating :1A max.
2. Contact Resistance:50mΩ max
3. Insulation Resistance:1000MΩ min./500VDC
4. Dielectric Withstanding Voltage:500VAC/1minute
5. Mating Force: 8N Max, Withdrawal Force: 1N Min.;
6. Durability: 3000 Cycles
7. Operating Temperature:−25°C to+85°C

Item	Part Name	Material	Description
6	Shell	Stainless Steel	Nickel Under Plated Overall.
5	Lever	Stainless Steel	
4	Cam	Stainless Steel	
3	Housing	Thermoplastics	Black,UL94V-0
2	Detect	Copper Alloy	Gold Flash on Solder Tails ; Gold Flash on Contact Area; Nickel Under Plated Overall.
1	Terminal	Copper Alloy	

GENERAL TOLERANCE			
SELECT	✓		
TOL. / ON:	1	2	3
X.XXX		±0.05	±0.15
X.XX	±0.20	±0.13	±0.25
X.X	±0.30	±0.25	±0.50
X.	±0.50	±0.38	±1.00
ANGLE	±2°		

UNITS mm
MAT'L
FINISH
Q'TY

NAME: MICRO SIM
PART NO: SI44C-08200
APPD: Vicky
CHKD: Doris
DR: Cmy

ATOM® 深圳市爱特姆科技有限公司 SHENZHEN ATOM TECHNOLOGY CO.,LTD.

TITLE: MICRO SIM CARD 6P SMT H=1.5mm

DWG NO. ATOM-A02877

SCALE	SHEET	REV
1:1	1/1	B